Loft Bed Safety Warning

*** Follow the information on the warnings appearing on the upper bunk end structure and on the carton. Do not remove the warning label from bed.**

*** Always use the recommended size mattress, mattress support or both to help prevent the likelihood of entrapment or falls.**

*** Surface of mattress must be at least 5 inches (127mm) below the upper edge of guardrails.**

*** Do not allow children under 6 years of age to use the upper bunk.**

*** Periodically check and ensure that the guardrail, ladder and other components are in their proper position, free from damage, and that all connectors are tight.**

*** Do not allow horseplay on or under bed and prohibit jumping on the bed.**

*** Always use the ladder for entering and leaving the upper bunk.**

*** Do not use substitute parts/replacement parts. Contact BombayKIDS for replacement parts at 1-800 829-7789.**

*** Use of a nightlight may provide added safety precaution for a child using the upper bunk.**

*** Always use guardrails on both long sides of the upper bunk. If the bed will be placed next to the wall, the guardrail that runs the full length of the bed should be placed against the wall to prevent entrapment between the bed and wall.**

*** The use of water or sleep flotation mattresses are prohibited.**

*** Keep these instructions for future reference.**

Parts List

1861264
Travis AN Loft System

A.	Headboard & Footboard	2 pcs
B.	Support Slats	13 pcs
C.	Front Guard Rail	1 pc
D.	Back Guard Rail	1pc
E.	Ladder	1 pc
F.	Big Wood Dowels	4 pcs
G.	Wood Caps	2 pcs
H.	Desk Top	1 pc
I.	Front Apron	1 pc
J.	Lower Side Assembly	2 pcs
K.	Upper Back Stretcher	1 pc
L.	Lower Back Stretcher	1 pc
M.	Hooks	2 pcs
N.	Long Allen Head Bolts	2 pcs
O.	Short Allen Head Bolts	29 pcs
P.	Flat Washers	29 pcs
Q.	Lock Washers	29 pcs
R.	Long Phillips Head Screws	26 pcs
S.	Short Phillips Head Screws	8 pcs
T.	Barrel Nuts	2 pcs
U.	Allen Head Wrench	1 pc
V.	Flat Head Screwdriver	1 pc
W.	Phillips Head Screwdriver	1 pc

Use only Bombay KIDS replacement parts. Call the following number to request the part, 1-800 829-7789.

* Please make sure that you have all the parts indicated above before you begin assembly of this item.
* This item should be assembled on a soft surface to prevent scratching the finish during assembly.
* This item may require periodic tightening.

Hardware Illustrations

1861264
Travis AN Loft System

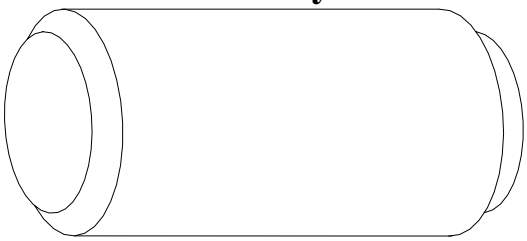

F. Big Wood Dowel

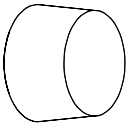

G. Wood Cap

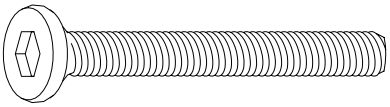

N. Long Allen Head Bolt

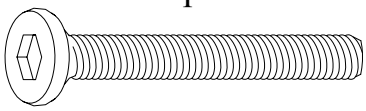

O. Short Allen Head Bolt

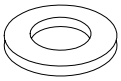

P. Flat Washer

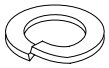

Q. Lock Washer

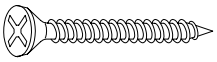

R. Long Phillips Head Screw

S. Short Phillips Head Screw

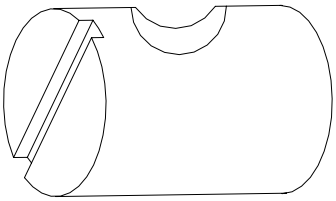

T. Barrel Nut

1861264
Travis AN Loft System

Assemble Upper Bed

Parts required

A.	Headboard & Footboard	2 pcs	R.	Long Phillips Head Screws	26 pcs
B.	Support Slats	13 pcs	T.	Barrel Nuts	2 pcs
C.	Front Guard Rail	1 pc	U.	Allen Head Wrench	1 pc
D.	Back Guard Rail	1 pc	V.	Flat Head Screwdriver	1 pc
G.	Wood Caps	2 pcs	W.	Phillips Head Screwdriver	1 pc
N.	Long Allen Head Bolts	2 pcs			

1 **Attach Front & Back Guard Rails (C, D)** Insert the exposed hooks of Front & Back Guard Rails (C, D) into the pre-bored slots of the Headboard & Footboard (A). Press Front & Back Guard Rails (C, D) down onto the pins in the the Headboard & Footboard (A). Make sure that the hooks are all the way down onto the pins and pre-drilled holes in the ends of Back Guard Rail (D) align with the pre-dilled holes in the posts of Headboard & Footboard (A). Insert the Barrel Nuts (T) into the pre-drilled holes in the Back Guard Rail (D). Make certain that the groove on the Barrel Nut (T) faces out. Align the holes in the Barrel Nuts (T) with the pre-dilled holes in the ends of Back Guard Rail (D). Barrel Nut (T) position can be adjusted with Flat Head Screwdriver (V). Insert Long Allen Head Bolts (N) into the pre-dilled holes in the posts of the Headboard & Footboard (A). Secure with Allen Head Wrench (U). Cover the heads of Long Allen Head Bolts (N) with Wood Caps (G). See illustration #1 **If the bunk will be placed next to the wall, the guard rail that runs the full length of the bed should be placed against the wall to prevent entrapment between the bed and the wall**.

2 **Attach Support Slats (B)** Align the pre-drilled holes in the Supports Slats (B) with pre-drilled holes in the cleats of Front & Back Guard Rails (C, D). Secure with Long Phillips Head Screws (R) using Phillips Head Screwdriver (W). See illustration #1

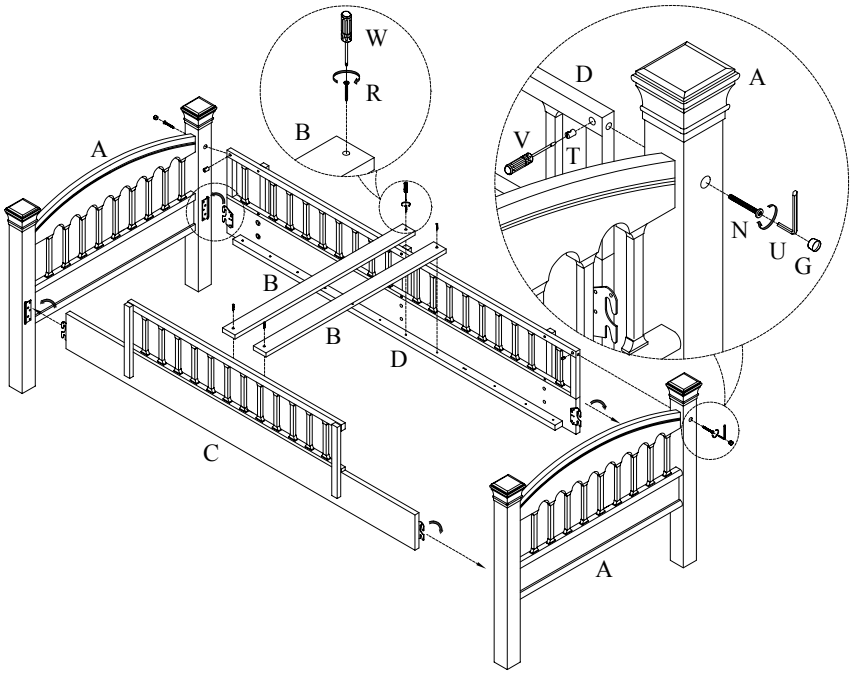

Illustration #1

1861264
Travis AN Loft System

Attach Front Apron

Parts required

H.	Desk Top	1 pc	P.	Flat Washers	5 pcs
I.	Front Apron	1 pc	Q.	Lock Washers	5 pcs
O.	Short Allen Head Bolts	5 pcs	U.	Allen Head Wrench	1 pc

3. **Attach Front Apron (I)** Put Desk Top (H) upside down on a soft surface. Align the pre-drilled holes in the Front Apron (I) with the pre-threaded holes in the Desk Top (H). Secure with Lock Washers (Q), Flat Washers (P) and Short Allen Head Bolts (O) using Allen Head Wrench (U). See illustration #2 **Front Apron may be removed only if Desktop is being supported by BombayKIDS modular storage units**.

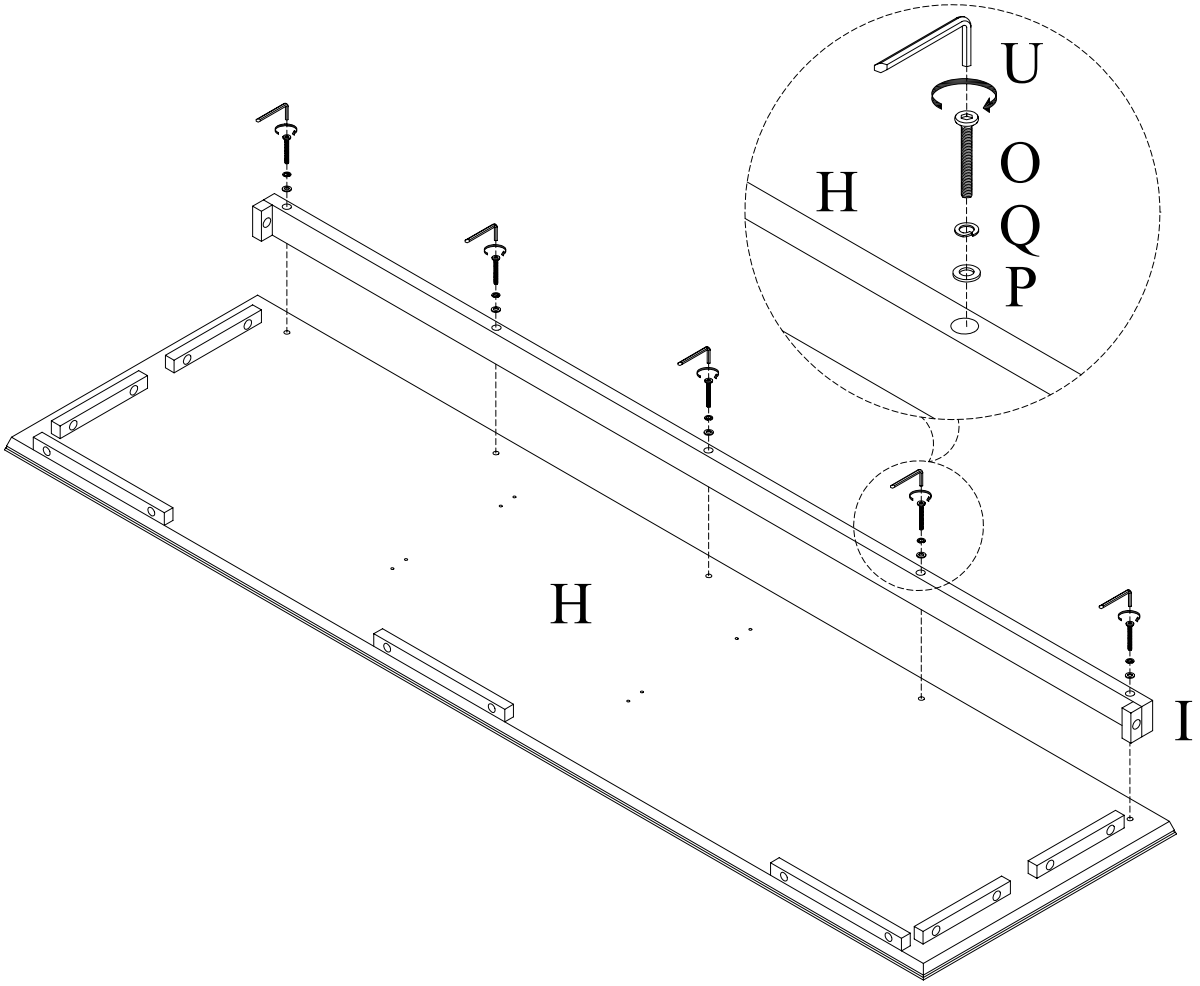

Illustration #2

Note: Please refer to assembly instructions for Keyboard Tray for instructions on attaching the Keyboard Tray to the Desk Top.

1861264
Travis AN Loft System

Attach Lower Side Assemblies & Desk Top

Parts required

H.	Desk Top	1 pc	O.	Short Allen Head Bolts	24 pcs
I.	Front Apron	1 pc	P.	Flat Washers	24 pcs
J.	Lower Side Assembly	2 pcs	Q.	Lock Washers	24 pcs
K.	Upper Back Stretcher	1 pc	U.	Allen Head Wrench	1 pc
L.	Lower Back Stretcher	1 pc			

4. **Attach Lower Side Assemblies (J)** Align pre-drilled holes in the cleat rails of the Upper & Lower Back Stretcher (K, L) with the pre-threaded holes in the posts of the Lower Side Assembly (J). Be sure that the cleat rails face inside, the dowels of Upper & Lower Back Strecher (K, L) align with the pre-drilled holes in the posts of the Lower Side Assemblies (J). Secure with Lock Washers (Q), Flat Washers (P) and Short Allen Head Bolts (O) using Allen Head Wrench (U). See illustration #3
5. **Attach Desk Top (H)** Put the Desk Top (H) on the stretchers of the Lower Side Assemblies (J). Make sure the pre-drilled holes or pre-threaded holes in the cleat rails of Desk Top (H) or blocks on back of the Front Apron (I) align with pre-drilled or pre-threaded holes in Upper & Lower Back Stretchers (K, L) or strechers of Lower Side Assemblies (J). Secure with Lock Washers (Q), Flat Washers (P) and Short Allen Head Bolts (O) using Allen Head Wrench (U). See illustration #3

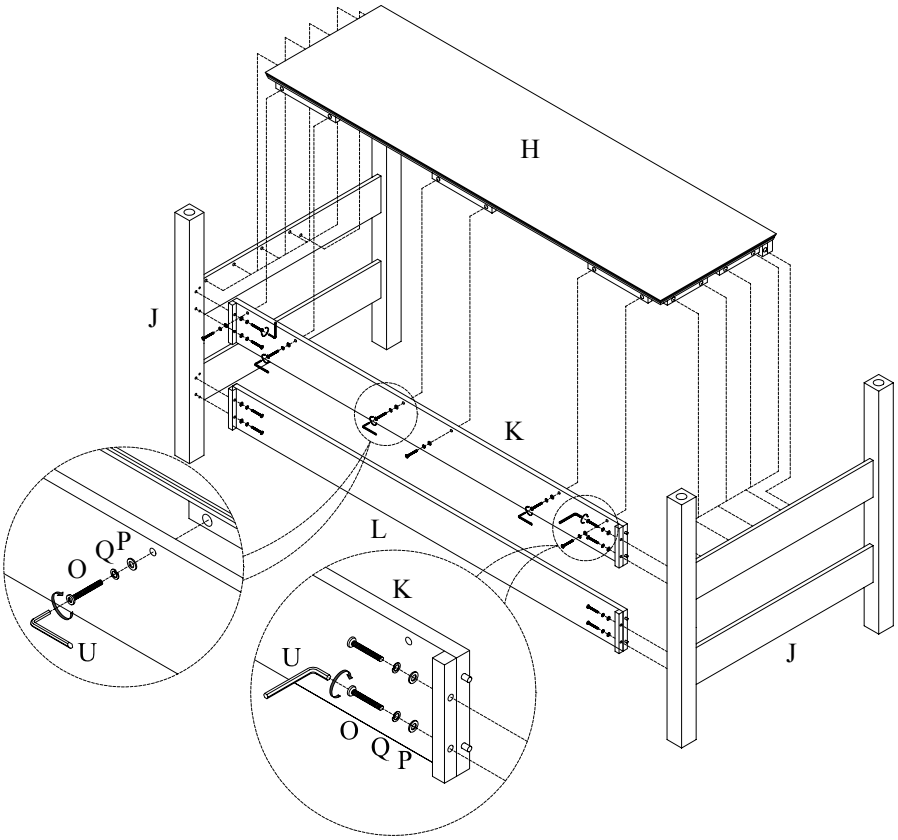

Illustration #3

1861264
Travis AN Loft System

Attach Upper Bed to Lower Side Assemblies & Attach Ladder

Parts required

A.	Headboard & Footboard	2 pcs	J.	Lower Side Assembly	2 pcs
C.	Front Guard Rail	1 pc	M.	Hooks	2 pcs
E.	Ladder	1 pc	S.	Short Phillips Head Screws	8 pcs
F.	Big Wood Dowels	4 pcs	W.	Phillips Head Screwdriver	1 pc

6. **Attach Upper Bed to Lower Side Assembly (J)** Insert Big Wood Dowels (F) into the pre-drilled holes in the posts of the Lower Side Assemblies (J). Lift the upper bed to align the pre-drilled holes in the post ends of the Headboard & Footboard (A) with the Big Wood Dowels (F). Put the upper bed on the Lower Side Assemblies (J). See illustration #4.

7. **Attach Hooks (M)** Align the pre-drilled holes in long part of Hooks (M) with the pre-drilled holes in the Ladder (E). Secure with Short Phillips Head Screws (S) using Phillips Head Screwdriver (W). See illustration #4.

8. **Attach Ladder (E)** Hook the Ladder (E) on the left or right of Front Guard Rail (C). Adjust and align the pre-drilled holes in the short part of Hooks (M) with the pre-drilled holes in the back of Front Guard Rail (C). Secure with Short Phillips Head Screws (S) using Phillips Head Screwdriver (W). See illustration #4.

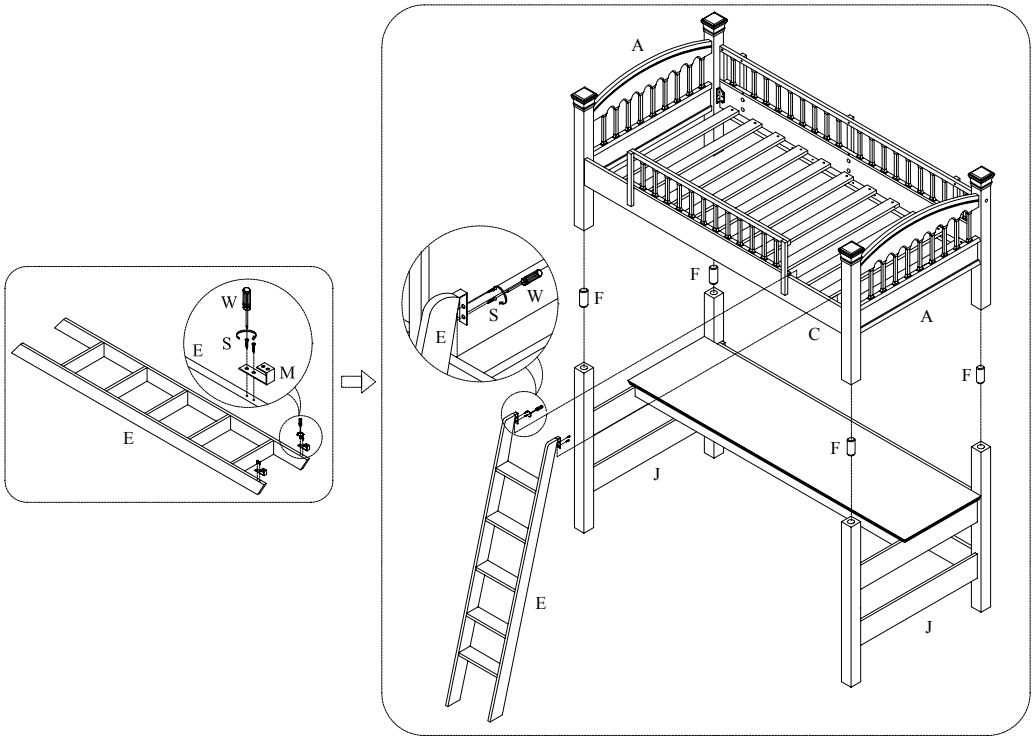

Illustration #4

Use only a mattress that is 75 inches long and 38-1/2 inches wide on the bunk beds. Ensure the thickness of mattress and foundation combined does not exceed 7 inches and the mattress surface is at least 5 inches below upper edge of guardrails.